SC2006 – Software Engineering

Lab 2 Deliverables

Lab Group	SCE3
Team	SilverConnect
	Lucas Cheong Wai (U2421947B)
	Wu Songxin
Members	Nicodemus Noel Lee
	Sivakumar Magina
	Lim Jia Yi

Table of Contents

1. Complete Use Case Diagram & Use Case descriptions 4
A. Use Case Diagram 4
B. Use Case Descriptions 4
I. For Functional Requirement #1 4
I.I ViewActivities 4
I.II RegisterActivities 6
I.III ViewLiveMap 7
I.IV ViewRecommendedDayTrips 8
II. For Functional Requirement #2 9
II.I LinkCaregiversToElderlyProfile 9
II.II CaregiversRegisterActivities 10
II.III CaregiversRegisterWithElderly 11
III. For Functional Requirement #3 12
III.I SubmitActivites 12
III.II EditActivity 13
III.III DeletePosting 14
III.IV ManageActivity 15
III.IV ModerateActivityFeedback 16
IV. For Functional Requirement #4 17
IV.I JoinActivity 17
IV.II ProvideFeedback 18
V. For Functional Requirement #5 19
V.I SignUp 19
V.II Login 20
V.III ForgetPassword 21
V.IV AuthenticateUser 22
2. Class diagram of entity classes, Key boundary classes and control classes 24
3. Stereotype Class diagram of entity classes, Key boundary classes and control classes 25
4. Sequence diagrams of all use cases 26
I. For Functional Requirement #1 26
I.I ViewActivities 26
I.II RegisterActivities 27
I.III ViewLiveMap 28
I.IV ViewRecommenededDayTrips 29
II. For Functional Requirement #2 30
II.I LinkCaregiversToElderlyProfile 30
II.II CaregiversRegisterActivities 30
II.III CaregiversRegisterWithElderly 31
III. For Functional Requirement #3 32
III.I SubmitActivites 32

III.II EditActivity 33
III.III DeleteActivity 34
III.IV ManageActivity 35
III.V ModerateActivityFeedback 36
IV. For Functional Requirement #4 37
IV.I JoinActivity 37
IV.II ProvideFeedback 38
V. For Functional Requirement #5 39
V.I AuthenthicateUser 39
V.II Register 39
V.III Login 40
V.IV ForgotPassword 41
5. Initial Dialog Map 42

1. Complete Use Case Diagram & Use Case descriptions

A. Use Case Diagram

B. Use Case Descriptions

I. For Functional Requirement #1

I.I ViewActivities

Use Case ID:	1-1		
Use Case Name:	ViewActivities		
Created By:	Sivakumar Magina	**Last Updated By:**	Sivakumar Magina
Data Created:	5/9/2025	**Date Last Updated:**	5/9/2025

Actor:	Elderly

Description:	The elderly can browse and filter through a full list of activities that are available in the various CCs, with real-time details and vacancy status.
Preconditions:	Elderly is logged in
Postconditions:	Activity details (name, description, date & time, group size, cost, location) are successfully displayed to the elderly.
Priority:	High
Frequency of Use:	High
Flow of Events:	1. Elderly navigates to the activities page and clicks on view activities. 2. The system loads the upcoming activities. 3. The system displays name, description, date, time, group size, vacancies, location of the activities 4. Elderly look through the activities if they do not have any criteria for the activities.
5. Alternative Flows:	AF-S2: If there are no activities: 1. An empty page will be shown. AF-S4: If elderly has any criteria regarding the location or type of event 1. Elderly will be shown AF-S4: If elderly has any other criteria they are looking out for 1. Elderly will search for activities using keywords via the 'search' function.
Exceptions:	None
Includes:	View Live Interactive Map Register for activity Search Activity
Special Requirements:	None
Assumptions:	None
Notes and Issues:	None

I.II RegisterActivities

Use Case ID:	1-2		
Use Case Name:	RegisterActivities		
Created By:	Sivakumar Magina	**Last Updated By:**	Sivakumar Magina
Data Created:	5/9/2025	**Date Last Updated:**	5/9/2025

Actor:	Elderly
Description:	Elderly can register for activities, confirm the booking, and deregister if needed.
Preconditions:	There are vacancies available.
Postconditions:	Registration is confirmed.
Priority:	High
Frequency of Use:	High
Flow of Events:	1. Elderly clicks on register. 2. The system shows the details of the activity and confirm button. 3. Elderly confirms. 4. If online participation is supported, the system issues the access link. 5. Elderly may deregister before the activity time.
Alternative Flows:	AF-S3: If the activity becomes full at confirmation 1. Show “Activity Full”
Exceptions:	None
Includes:	None
Special Requirements:	None
Assumptions:	None
Notes and Issues:	None

I.III ViewLiveMap

Use Case ID:	1-3		
Use Case Name:	ViewLiveMap		
Created By:	Sivakumar Magina	**Last Updated By:**	Sivakumar Magina
Data Created:	5/9/2025	**Date Last Updated:**	5/9/2025

Actor:	Elderly
Description:	Elderly can open a map, see pins on the map where CCs are located, view CC details and directly access and register for activities from the map view.
Preconditions:	None
Postconditions:	Registration is confirmed if elderly registers.
Priority:	High
Frequency of Use:	Medium
Flow of Events:	1. Elderly opens Map. 2. The system shows nearby CC pins. 3. Clicking on a pin will reveal CC info. 4. Elderly taps ‘View Activities’ to see available events. 5. If interested, elderly registers.
Alternative Flows:	AF-S4: If there are no available activities in the CC 1. An empty page will be shown.
Exceptions:	None
Includes:	RegisterActivity(I.II)
Special Requirements:	None
Assumptions:	None
Notes and Issues:	None

I.IV ViewRecommendedDayTrips

Use Case ID:	1-4		
Use Case Name:	ViewRecommendedDayTrips		
Created By:	Jia Yi	**Last Updated By:**	Jia Yi
Data Created:	15/9/2025	**Date Last Updated:**	15/9/2025

Actor:	Elderly
Description:	The user can browse through a list of possible daytrips, that include activities at CCs and nearby places. These daytrips will be curated based off of past user activity data and preference indicators.
Preconditions:	Elderly is logged in
Postconditions:	The activities, timetable and route of the day trip is successfully displayed to the elderly.
Priority:	High
Frequency of Use:	High
Flow of Events:	1. Elderly navigates to the activities page and clicks on “View Day Trips”. 2. Different recommended day trip plans are shown to the user 3. User selects a day trip plan 4. The locations, name of activities, description of activities, route and estimated time taken for each portion of the day trip is shown on live map 5. Users will then edit parts of the daytrip as they like, changing activities, locations, duration of time spent at places etc… 6. Changes are reflected on live map 7. After final confirmation, users will be registered for selected activities available on SilverConnect
6. Alternative Flows:	None
Exceptions:	None
Includes:	View Live Interactive Map Register for activity Search Activity
Special Requirements:	None

Assumptions:	None
Notes and Issues:	None

II. For Functional Requirement #2

II.I LinkCaregiversToElderlyProfile

Use Case ID:	2-1		
Use Case Name:	LinkCaregiversToElderlyProfile		
Created By:	Sivakumar Magina	**Last Updated By:**	Sivakumar Magina
Data Created:	5/9/2025	**Date Last Updated:**	5/9/2025

Actor:	Caregivers, Elderly
Description:	Caregiver can send request to link with elderly's account and link accounts when elderly approves.
Preconditions:	1. Caregiver is logged in. 2. Caregiver knows elderly's details.
Postconditions:	1. Caregiver and elderly's account linked once approved. 2. Caregiver able to view elderly's profile once linked.
Priority:	High
Frequency of Use:	Medium
Flow of Events:	1. Caregiver submits the request to link to elderly's account by entering the elderly's name and email. 2. The elderly will receive a verification link. 3. The elderly will approve the caregiver's request to link. 4. The caregiver will be able to view the elderly's profile.
Alternative Flows:	AF-S3: If the elderly rejects the request 1. Caregiver will be notified
Exceptions:	None
Includes:	None

Special Requirements:	None
Assumptions:	None
Notes and Issues:	None

II.II CaregiversRegisterActivities

Use Case ID:	2-2		
Use Case Name:	CaregiversRegisterActivities		
Created By:	Sivakumar Magina	**Last Updated By:**	Sivakumar Magina
Data Created:	5/9/2025	**Date Last Updated:**	5/9/2025

Actor:	Caregiver, Elderly
Description:	After link verification, caregiver can register Elderly for an activity.
Preconditions:	1. Link verified. 2. There are vacancies for the activity.
Postconditions:	1. Registration is successful is caregiver registers.
Priority:	High
Frequency of Use:	Medium
Flow of Events:	1. Caregiver opens an activity. 2. Caregiver selects a register for the elderly. 3. Caregiver confirms registration. 4. Notification of registration sent to both elderly and caregiver.
Alternative Flows:	None
Exceptions:	None
Includes:	None
Special Requirements:	None
Assumptions:	None
Notes and Issues:	None

II.III CaregiversRegisterWithElderly

Use Case ID:	2-3		
Use Case Name:	CaregiversRegisterWithElderly		
Created By:	Sivakumar Magina	**Last Updated By:**	Sivakumar Magina
Data Created:	5/9/2025	**Date Last Updated:**	5/9/2025

Actor:	Caregiver, Elderly
Description:	After link verification, caregiver can choose to register themselves together with the Elderly for an activity.
Preconditions:	1. Link verified. 2. There are sufficient vacancies for the activity.
Postconditions:	Registration is successful if caregiver registers.
Priority:	Medium
Frequency of Use:	Medium
Flow of Events:	1. Caregiver opens an activity. 2. Caregiver selects register for the elderly. 3. Caregiver selects register for themself. 4. Caregiver confirms both registrations. 5. Notification of registration sent to both elderly and caregiver.
Alternative Flows:	None
Exceptions:	None
Includes:	CaregiversRegisterActivities (II.II)
Special Requirements:	None
Assumptions:	None
Notes and Issues:	None

III. For Functional Requirement #3

III.I SubmitActivites

Use Case ID:	3-1		
Use Case Name:	SubmitActivities		
Created By:	Nicodemus	**Last Updated By:**	Jia Yi
Data Created:	5/9/2025	**Date Last Updated:**	15/9/2025

Actor:	Admin
Description:	Allows admin to submit activities postings
Preconditions:	Admin in logged in and verified
Postconditions:	The said activity is posted
Priority:	High
Frequency of Use:	High
Flow of Events:	1. Admin clicks on submit activities button 2. A form will be displayed showing the activity's names, description, start/end time, group size, cost. 3. Admin clicks on "confirm" 4. Database API is updated with activity data
Alternative Flows:	AF-F1: If the admin clicks on "cancel" 1. The activity will not be posted
Exceptions:	None
Includes:	None
Special Requirements:	None
Assumptions:	There are activities for admin to submit
Notes and Issues:	None

III.II EditActivity

Use Case ID:	3-2		
Use Case Name:	EditActivity		
Created By:	Nicodemus	**Last Updated By:**	Jia Yi
Data Created:	5/9/2025	**Date Last Updated:**	15/9/2025

Actor:	Admin
Description:	Allows admin to edit activities
Preconditions:	Admin is logged in and verified
Postconditions:	The said activity is edited and updated
Priority:	High
Frequency of Use:	High
Flow of Events:	1. Admin clicks on edit activities button 2. A menu will be displayed showing all current activities that are posted 3. Admin selects an activity to edit 4. A form will be displayed showing the activity's details (name, description, starting time, group size, cost) 5. Admin updates the details of the activity 6. Admin clicks on confirm or cancel 7. Database API is updated
Alternative Flows:	AF-F2: If the admin clicks on cancel 1. The activity will not be updated and edited
Exceptions:	None
Includes:	None
Special Requirements:	None
Assumptions:	There are activities posted

Notes and Issues:	None

III.III DeletePosting

Use Case ID:	3-3		
Use Case Name:	DeletePosting		
Created By:	Nicodemus	**Last Updated By:**	Jia Yi
Data Created:	5/9/2025	**Date Last Updated:**	15/9/2025

Actor:	Admin
Description:	Allows admin to delete activities
Preconditions:	Admin is logged in and verified
Postconditions:	1. The said activity is deleted 2. Users that signed up for the said activity will be notified and refunded if applicable
Priority:	High
Frequency of Use:	Medium
Flow of Events:	1. Admin clicks on delete activities button 2. A menu will be displayed showing all current activities that are posted 3. Admin selects an activity to delete 4. A form will be displayed showing the activity's details (name, description, starting time, group size, cost) 5. Admin inputs the reason for deletion 6. Admin clicks on confirm or cancel 7. Database API is updated
Alternative Flows:	AF-F3: If the admin clicks on cancel 1. The activity will not be deleted
Exceptions:	None
Includes:	None

Special Requirements:	None
Assumptions:	There are activities posted
Notes and Issues:	None

III.IV ManageActivity

Use Case ID:	3-4		
Use Case Name:	ManageActivity		
Created By:	Nicodemus	**Last Updated By:**	Nicodemus
Data Created:	5/9/2025	**Date Last Updated:**	5/9/2025

Actor:	Admin
Description:	Allows admin to select actions to take
Preconditions:	Admin is logged in and verified
Postconditions:	None
Priority:	High
Frequency of Use:	High
Flow of Events:	1. System uses use case Login to verify the admin 2. On successful login, system prompts admin to select the desired activity: Submit Activity, Edit Activity, Delete Activity or Log Out 3. If the admin selects Submit Activity, the admin will use the use case SubmitActivity 4. If the admin selects Edit Activity, the admin will use the use case EditActivity 5. If the admin selects Delete Activity, the admin uses the use case DeleteActivity 6. If the admin selects Log Out, the system returns to the login screen
Alternative Flows:	None

Exceptions:	None
Includes:	1. SubmitActivity 2. EditActivity 3. DeleteActivity
Special Requirements:	None
Assumptions:	None
Notes and Issues:	None

III.IV ModerateActivityFeedback

Use Case ID:	3-4		
Use Case Name:	ModerateFeedback		
Created By:	Jia Yi	**Last Updated By:**	Jia Yi
Data Created:	15/9/2025	**Date Last Updated:**	15/9/2025

Actor:	Admins
Description:	Allows admins to moderate the reviews left on the
Preconditions:	Admins are logged in and verified
Postconditions:	
Priority:	Medium
Frequency of Use:	Low
Flow of Events:	1. Admins click on the “manage activities” button 2. Admins select which activity to look into its reviews 3. Admins choose to submit a review for deletion along with a valid reason 4. Corresponding activity review is deleted
Alternative Flows:	AF-S4: If the reason provided is invalid or missing: 1. Review is not deleted and a notification that their request is

	denied is sent
Exceptions:	None
Includes:	None
Special Requirements:	None
Assumptions:	Reviews have been left on previous activities
Notes and Issues:	None

IV. For Functional Requirement #4

IV.I JoinActivity

Use Case ID:	4-1		
Use Case Name:	JoinActivity		
Created By:	Nicodemus	**Last Updated By:**	Nicodemus
Data Created:	5/9/2025	**Date Last Updated:**	5/9/2025

Actor:	Volunteers
Description:	Allows volunteers to request to join elderly users on activities
Preconditions:	Volunteers are logged in and verified
Postconditions:	Volunteers receives a notification that they are successfully registered
Priority:	High
Frequency of Use:	High
Flow of Events:	1. Volunteers clicks on join now button under the activity post 2. System sends a request to the elderly user's inbox 3. Elderly approves the request
Alternative Flows:	AF-F4: If the elderly does not approve the request 1. Volunteers receives a notification that they are NOT successfully

	registered
Exceptions:	None
Includes:	None
Special Requirements:	None
Assumptions:	None
Notes and Issues:	None

IV.II ProvideFeedback

Use Case ID:	4-2		
Use Case Name:	ProvideFeedback		
Created By:	Nicodemus	**Last Updated By:**	Jia Yi
Data Created:	5/9/2025	**Date Last Updated:**	15/9/2025

Actor:	Volunteers
Description:	Allows volunteers to provide feedback on completion of an activity with a elderly
Preconditions:	Volunteers are logged in and verified The activity to be reviewed has ended
Postconditions:	Feedback is visible in the activity to the elderly and volunteers
Priority:	High
Frequency of Use:	Medium
Flow of Events:	1. Volunteers click on the review button 2. Volunteers select which activity to review 3. Volunteers key in their review
Alternative Flows:	AF-F5: If the volunteer click on cancel at any point of time: 2. Returns to the home page

Exceptions:	None
Includes:	None
Special Requirements:	None
Assumptions:	None
Notes and Issues:	None

V. For Functional Requirement #5

V.I SignUp

Use Case ID:	5-1		
Use Case Name:	SignUp		
Created By:	Nicodemus	**Last Updated By:**	Nicodemus
Data Created:	5/9/2025	**Date Last Updated:**	5/9/2025

Actor:	Users
Description:	Allows users to sign up for the system
Preconditions:	None
Postconditions:	User is registered and verified in the system and segregated by their roles (elderly, caregiver, CC admin, volunteer)
Priority:	High
Frequency of Use:	High
Flow of Events:	1. User clicks on the register button 2. A form will be displayed, prompting the user to enter details (role, name, age, contact number, email, preferred language, password,

	verified organization email address) 3. User clicks on register button
Alternative Flows:	AF-F5: If the user clicks on cancel at any time 1. System returns to log in page
Exceptions:	If the phone number or email address provided is a duplicate: 1. An error message will be displayed (“duplicate phone number or email address”)
Includes:	None
Special Requirements:	None
Assumptions:	None
Notes and Issues:	None

V.II Login

Use Case ID:	5-2		
Use Case Name:	Login		
Created By:	Lim Jia Yi	**Last Updated By:**	Lim Jia Yi
Data Created:	7/9/2025	**Date Last Updated:**	7/9/2025

Actor:	Users
Description:	Allows users to login to the system
Preconditions:	User has been registered and verified in the system as under of the roles (elderly, caregiver, CC admin, volunteer)
Postconditions:	User can access role-related functions and is at homepage
Priority:	High
Frequency of Use:	High
Flow of Events:	1. User clicks on the login button 2. A form will be displayed, prompting the user to enter their username and password 3. User clicks on Login button

	4. User is shown homepage and has access to role-related functions
Alternative Flows:	AF-F5: If the user clicks on cancel at any time 1. System returns to log in page
Exceptions:	If the Username or Password provided are incorrect: 1. An error message will be displayed (“Password or Username is incorrect”)
Includes:	Forget Password
Special Requirements:	None
Assumptions:	None
Notes and Issues:	None

V.III ForgetPassword

Use Case ID:	5-3		
Use Case Name:	ForgetPassword		
Created By:	Lim Jia Yi	**Last Updated By:**	Lim Jia Yi
Data Created:	7/9/2025	**Date Last Updated:**	7/9/2025

Actor:	Users
Description:	Allows users to reset their password
Preconditions:	User has been registered and verified in the system as under of the roles (elderly, caregiver, CC admin, volunteer)
Postconditions:	User has reset their password
Priority:	High
Frequency of Use:	Low
Flow of Events:	1. User clicks on the ForgetPassword button 2. A form will be displayed, prompting

	the user to enter their username or email 3. An OTP will be sent to either the account holder's email or to their phone via sms 4. User will be prompted to enter the OTP received 5. If the OTP is correct an option to reset the Password will be provided
Alternative Flows:	
Exceptions:	If the OTP provided is incorrect: 2. An error message will be displayed ("OTP is incorrect, please try again")
Includes:	None
Special Requirements:	None
Assumptions:	None
Notes and Issues:	None

V.IV AuthenticateUser

Use Case ID:	5-4		
Use Case Name:	Authenticate user		
Created By:	Lim Jia Yi	**Last Updated By:**	Lim Jia Yi
Data Created:	15/9/2025	**Date Last Updated:**	15/9/2025

Actor:	Users
Description:	Allows users to either login or register
Preconditions:	None
Postconditions:	User is either at register or Login Page
Priority:	High
Frequency of Use:	High
Flow of Events:	1. Home page loads 2. User is presented with 2 buttons either "login" or "register" 3. User will be entered to the respective form based on what they

	click
Alternative Flows:	None
Exceptions:	None
Includes:	None
Special Requirements:	None
Assumptions:	None
Notes and Issues:	None

2. Class diagram of entity classes, Key boundary classes and control classes

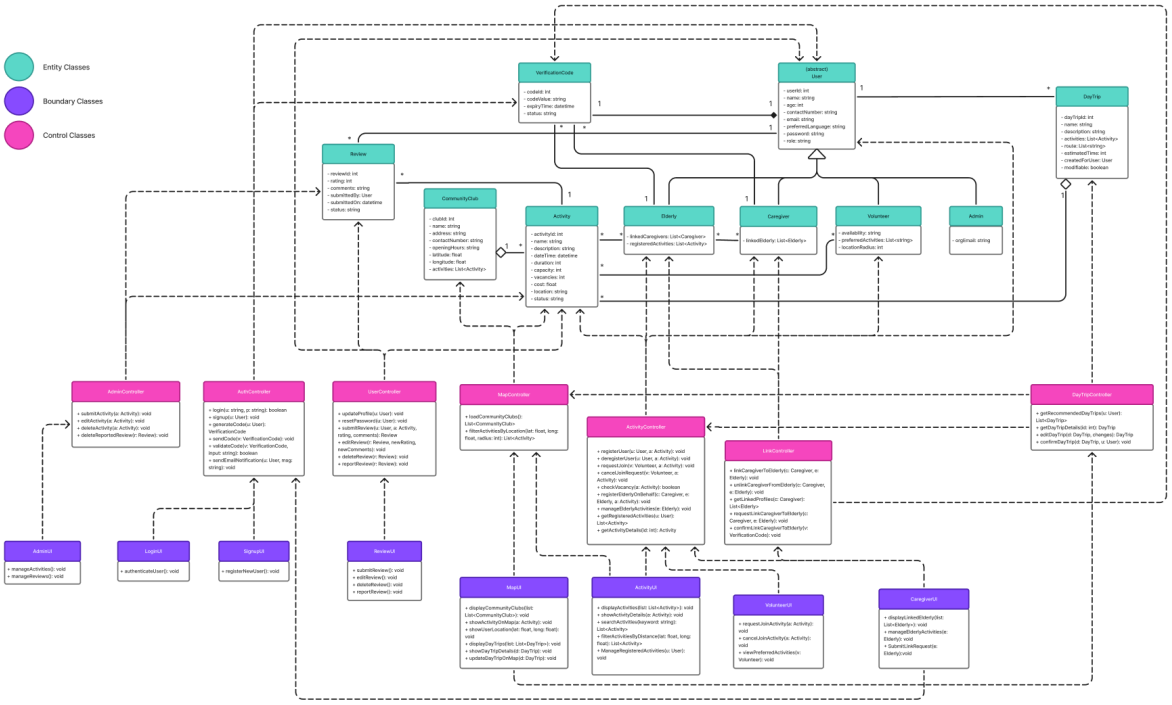

3. Stereotype Class diagram of entity classes, Key boundary classes and control classes

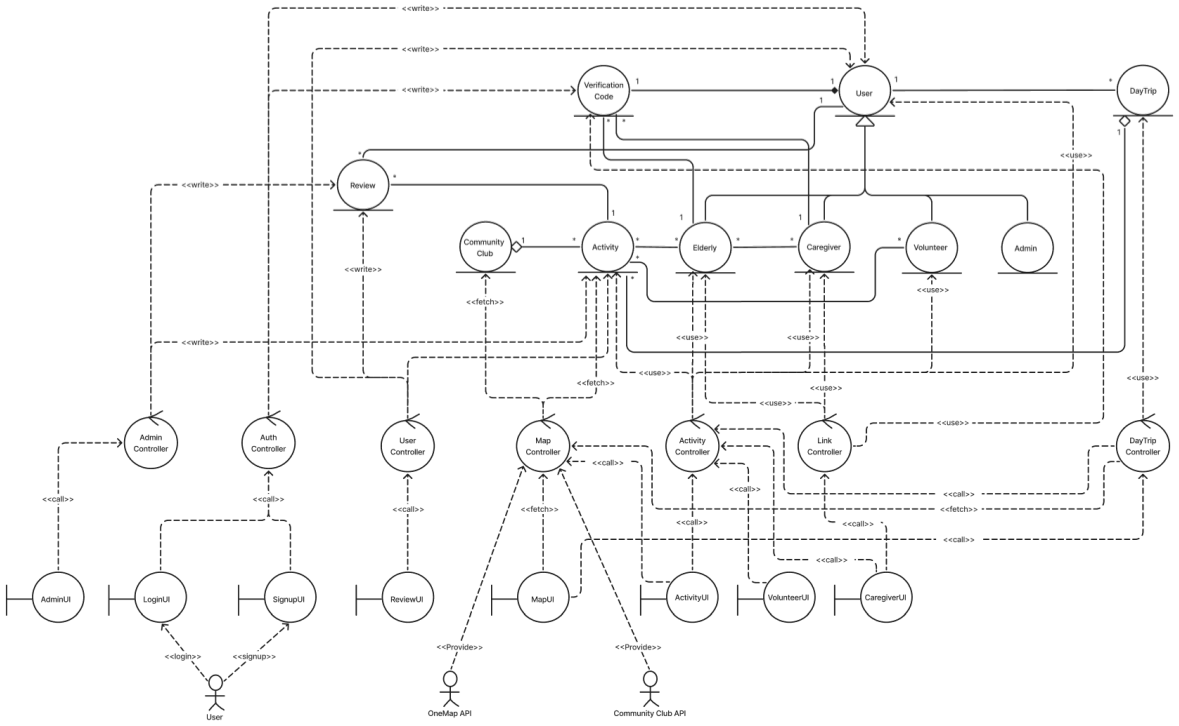

4. Sequence diagrams of all use cases

I. For Functional Requirement #1

I.I ViewActivities

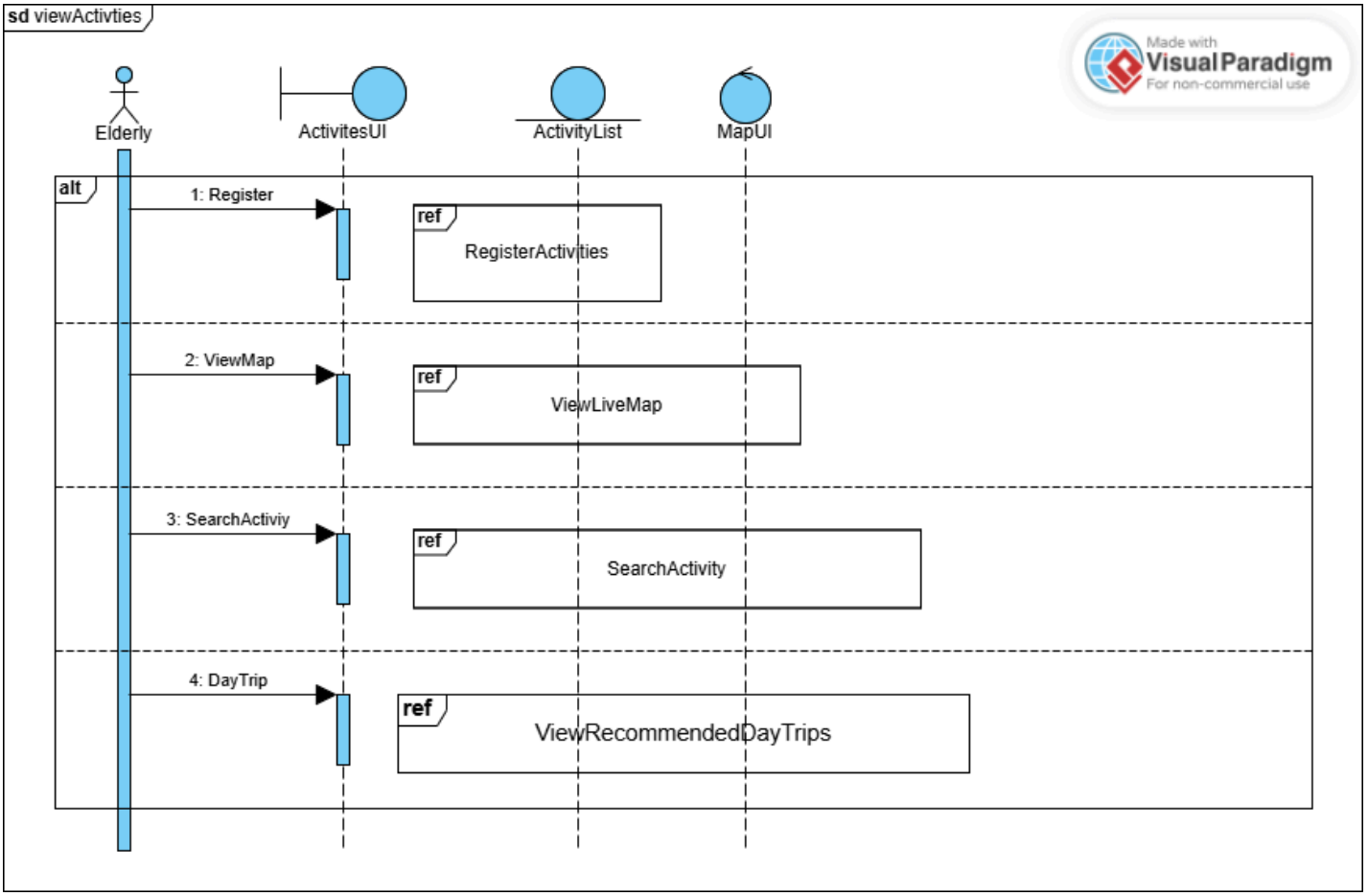

I.II RegisterActivities

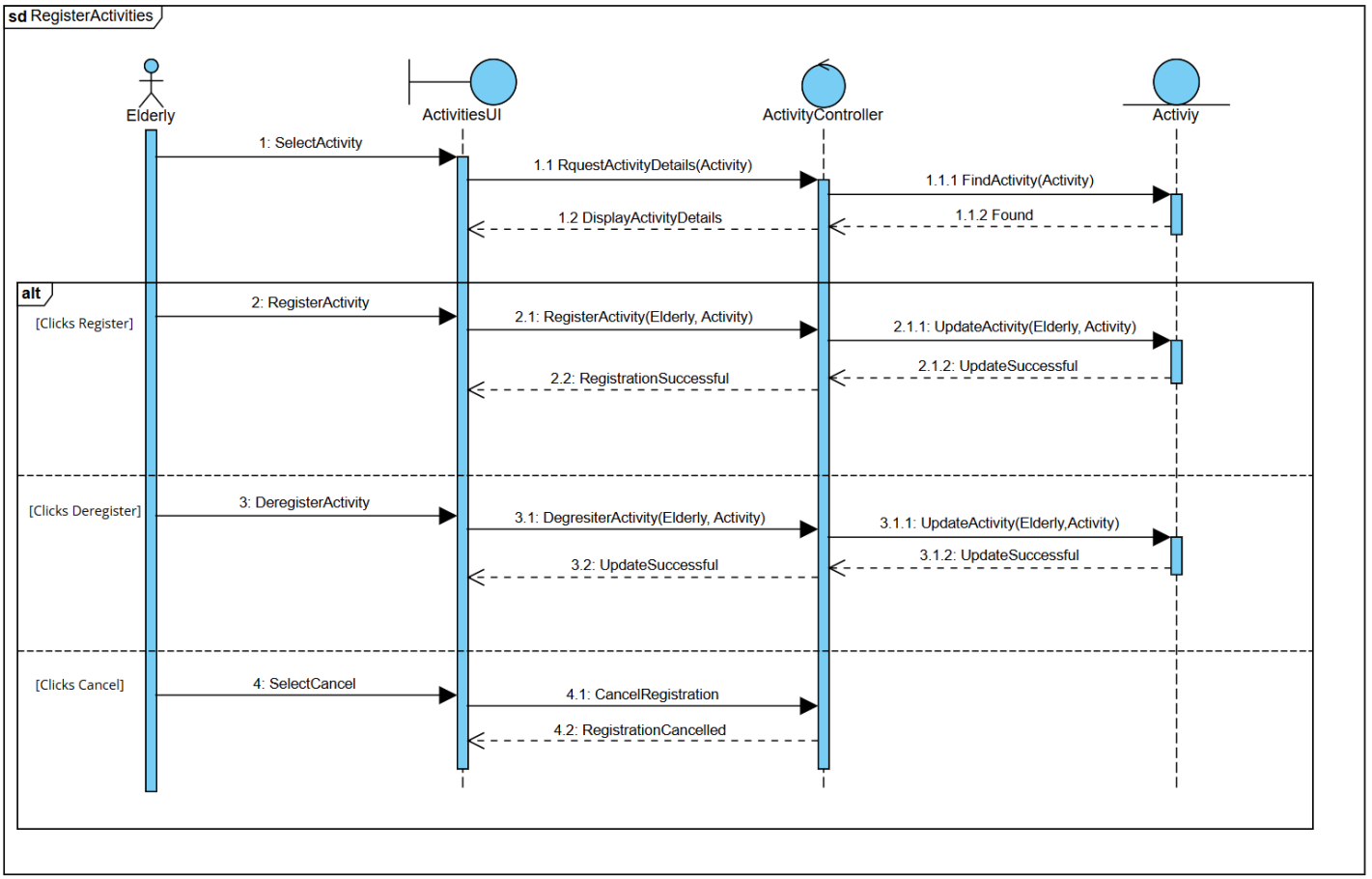

I.III ViewLiveMap

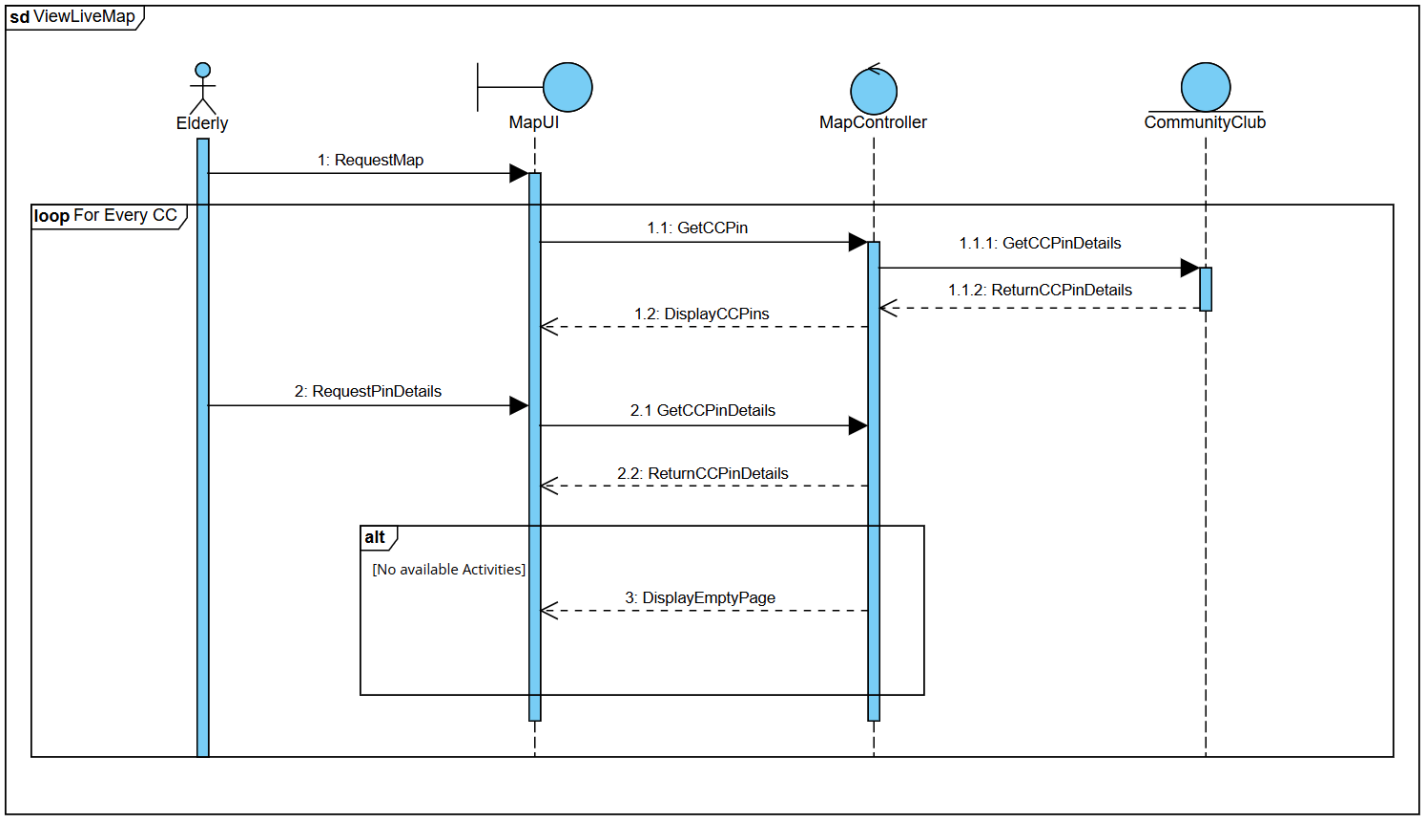

I.IV ViewRecommenededDayTrips

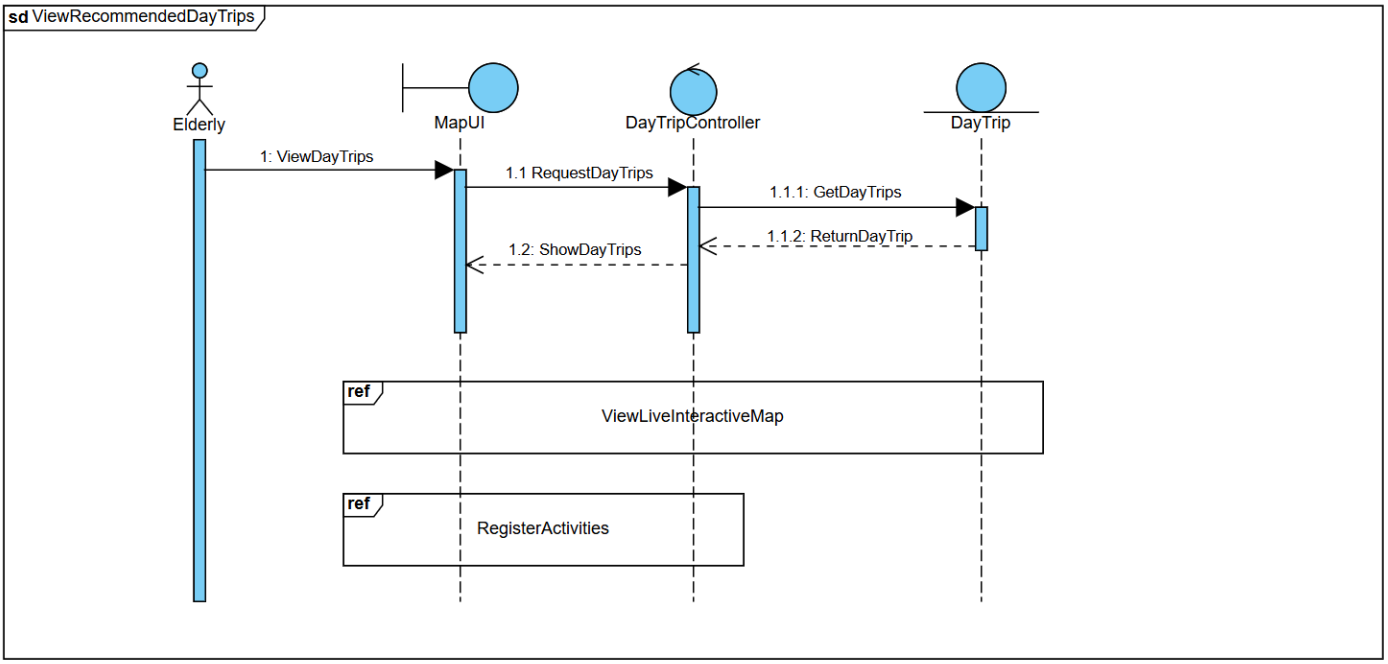

II. For Functional Requirement #2

II.I LinkCaregiversToElderlyProfile

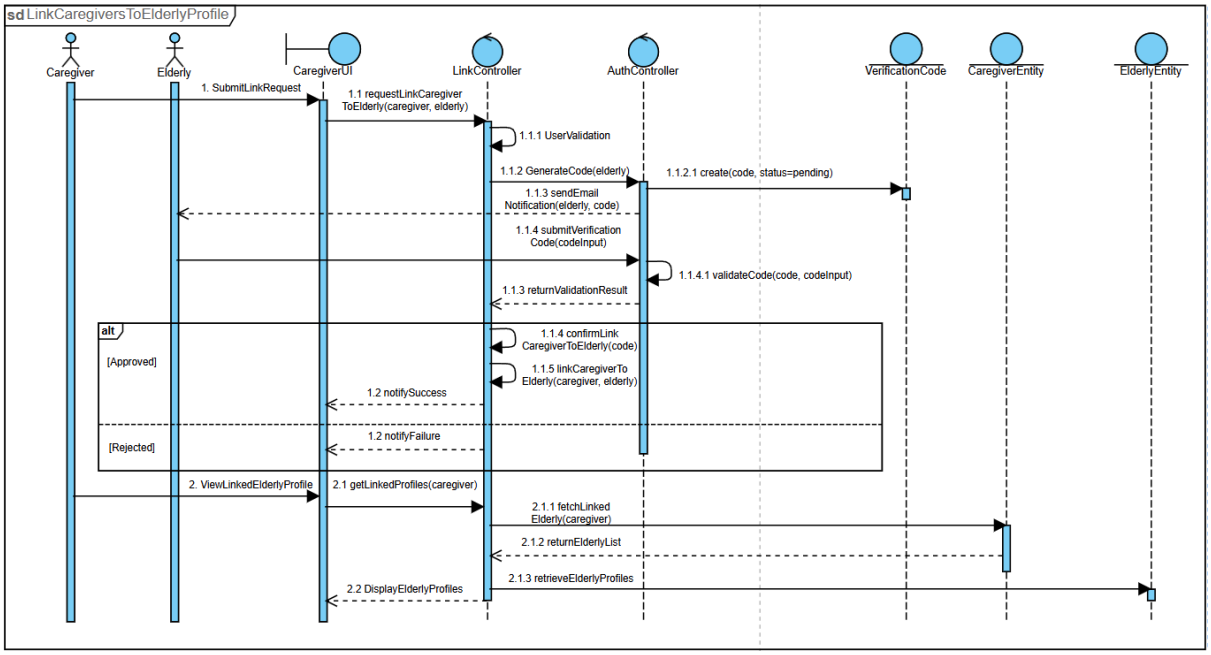

II.II CaregiversRegisterActivities

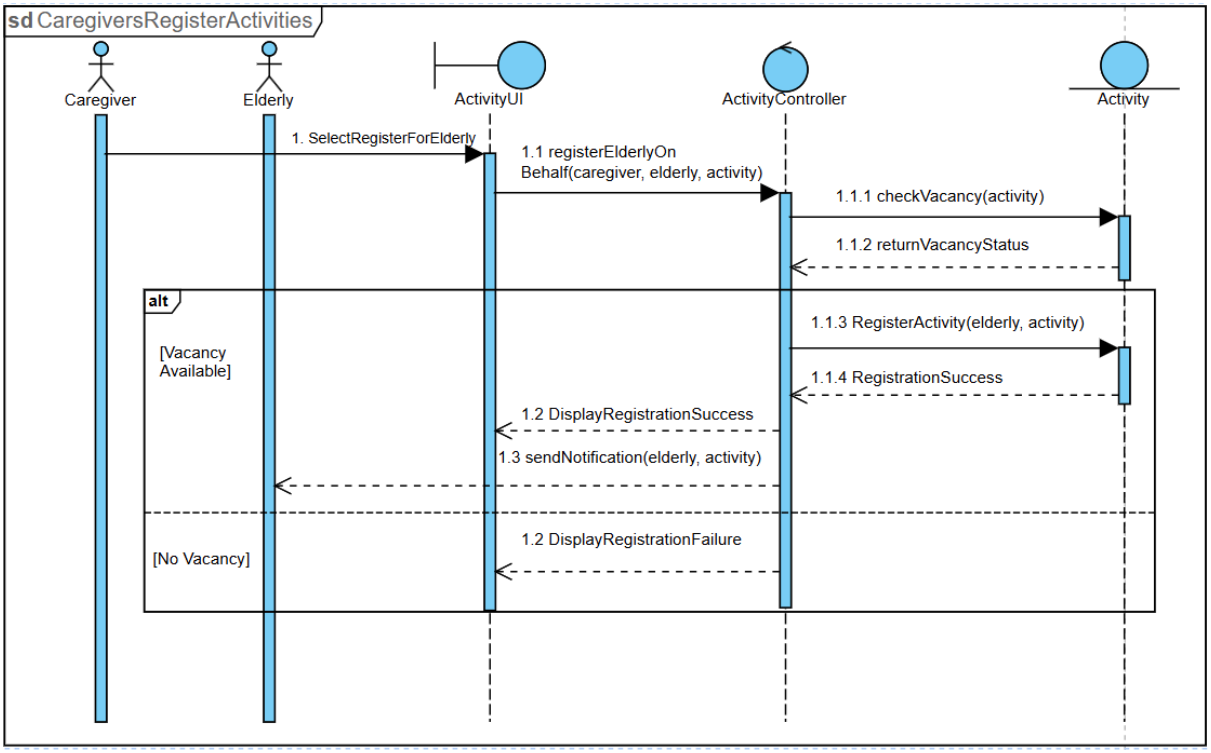

II.III CaregiversRegisterWithElderly

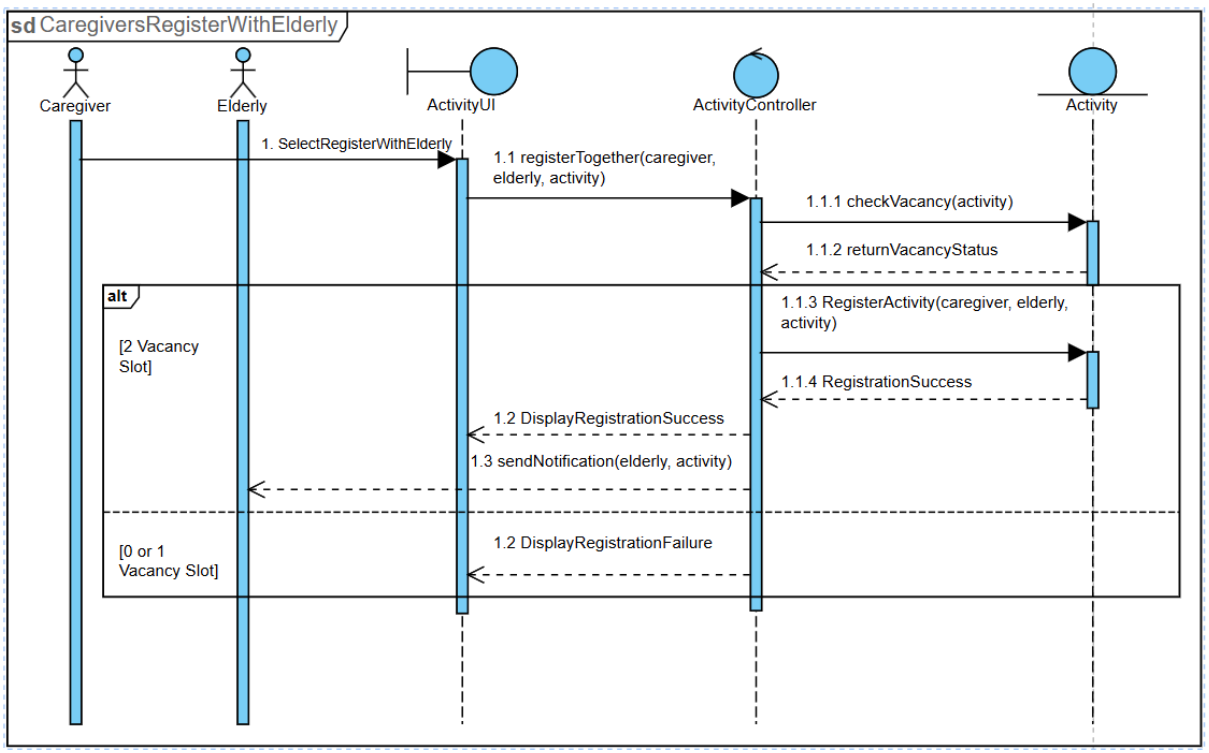

III. For Functional Requirement #3

III.I SubmitActivites

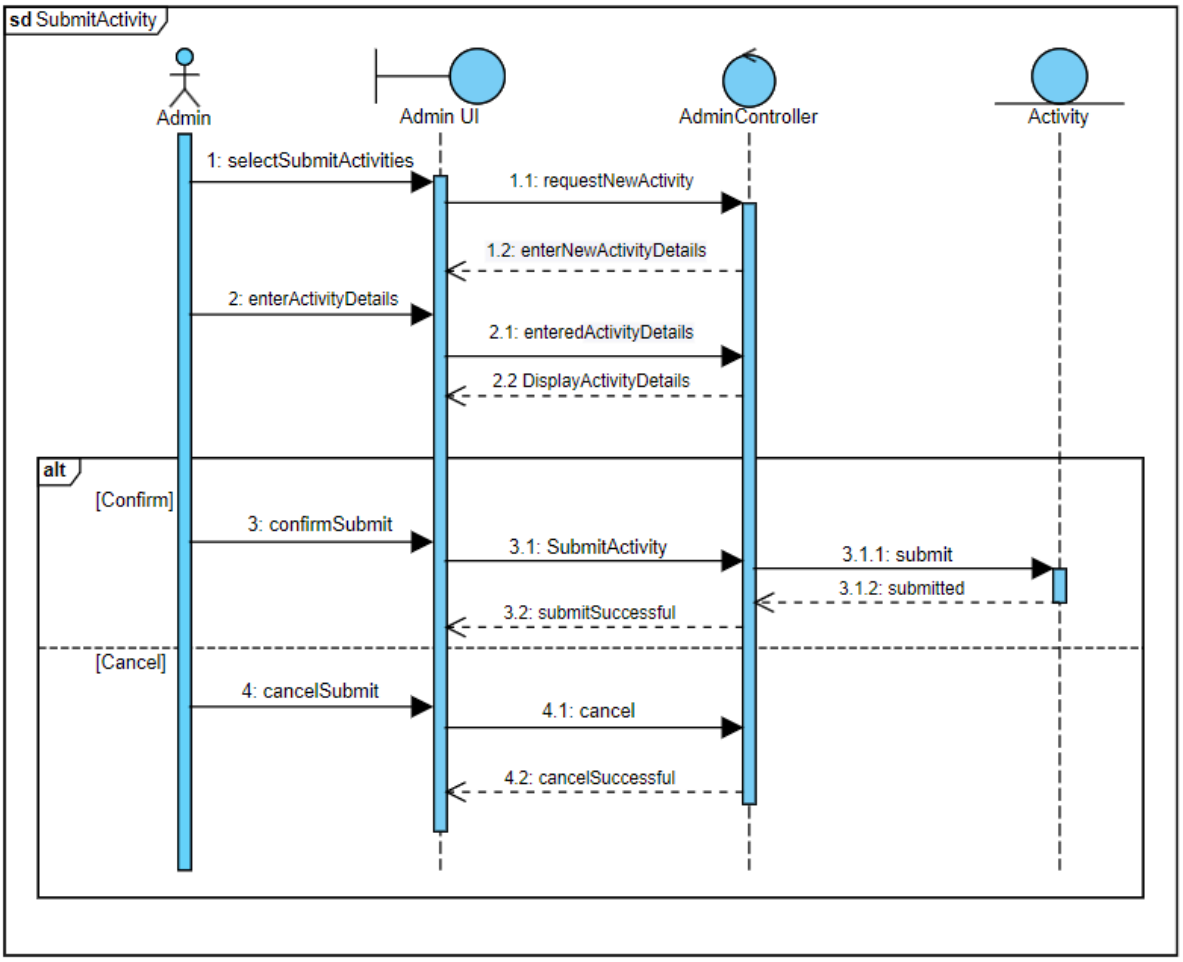

III.II EditActivity

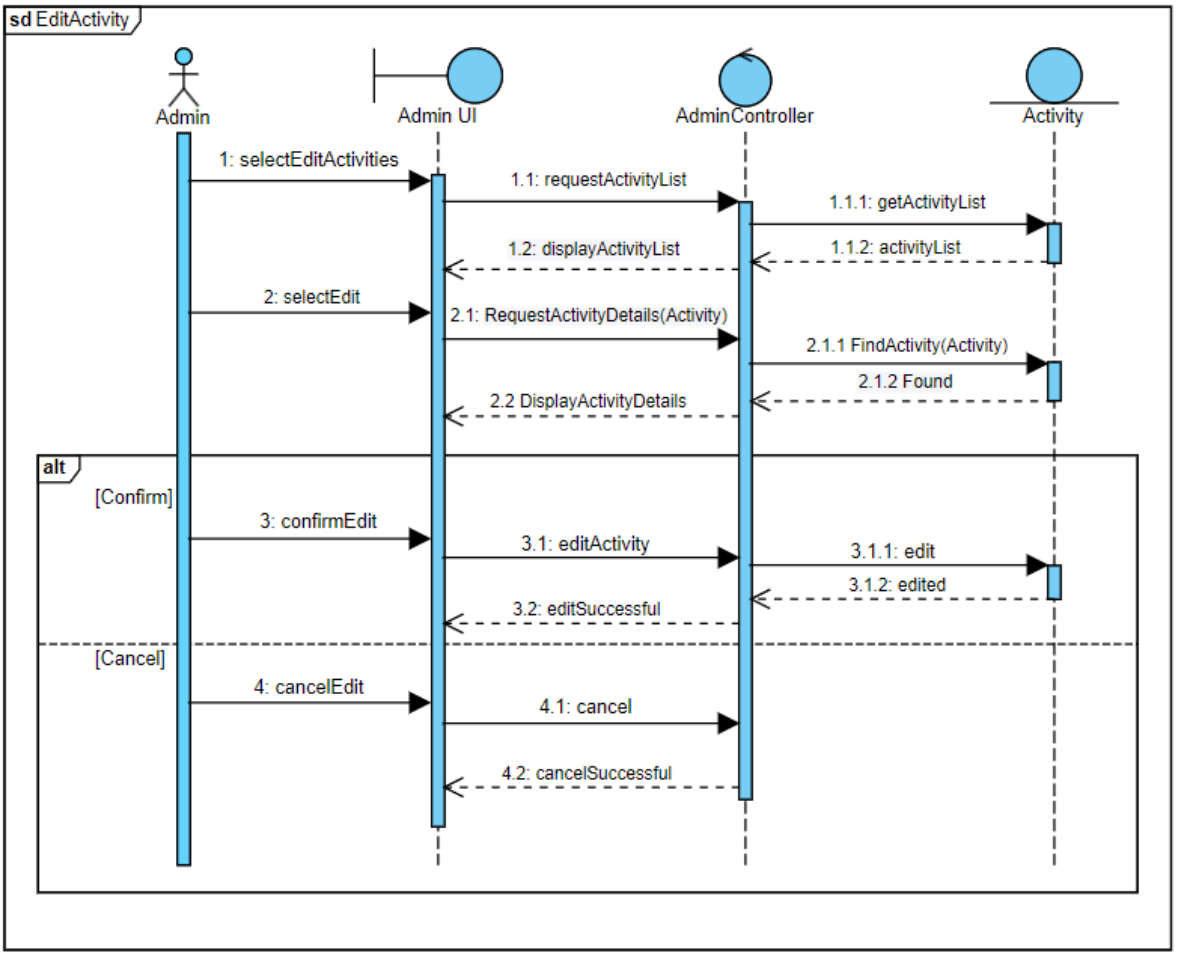

III.III DeleteActivity

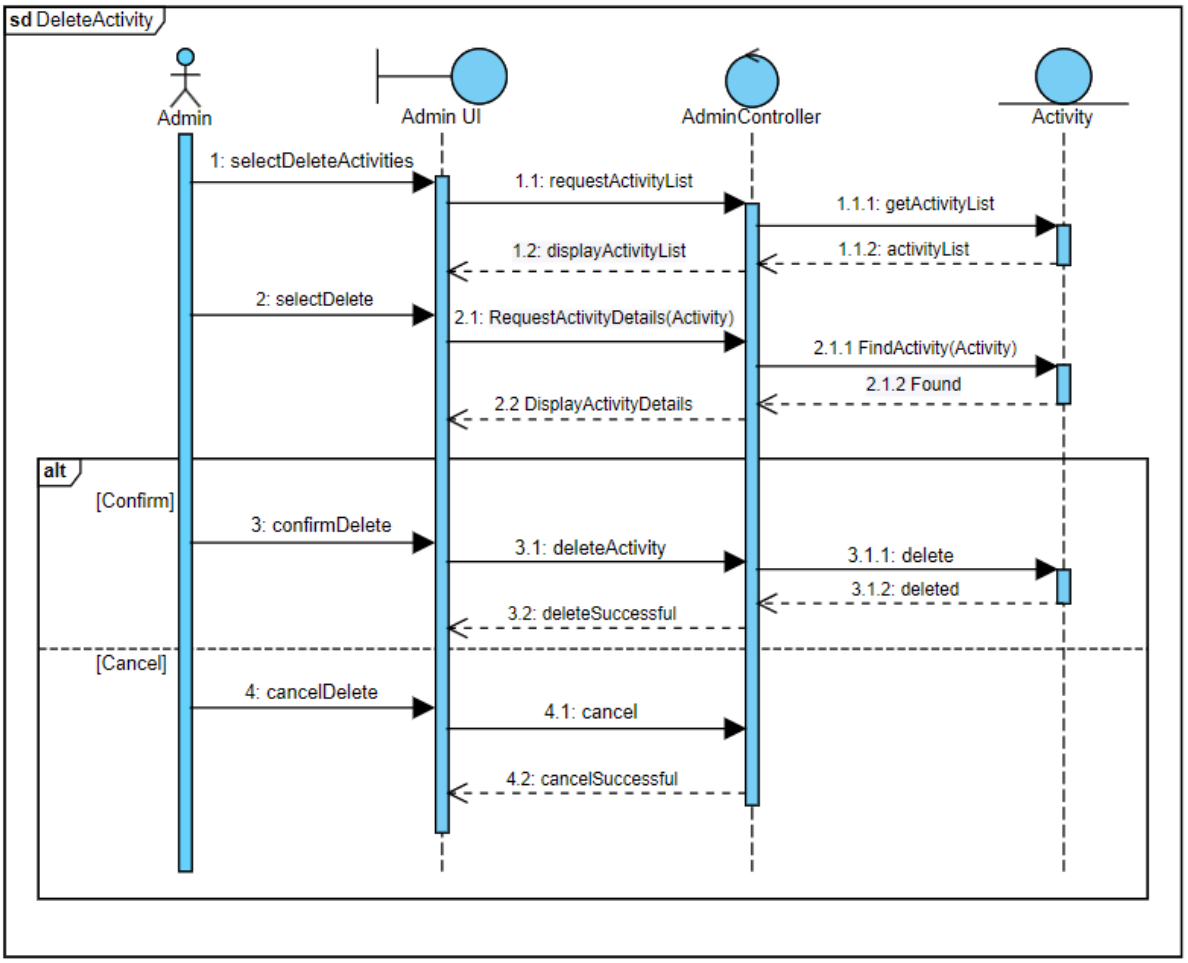

III.IV ManageActivity

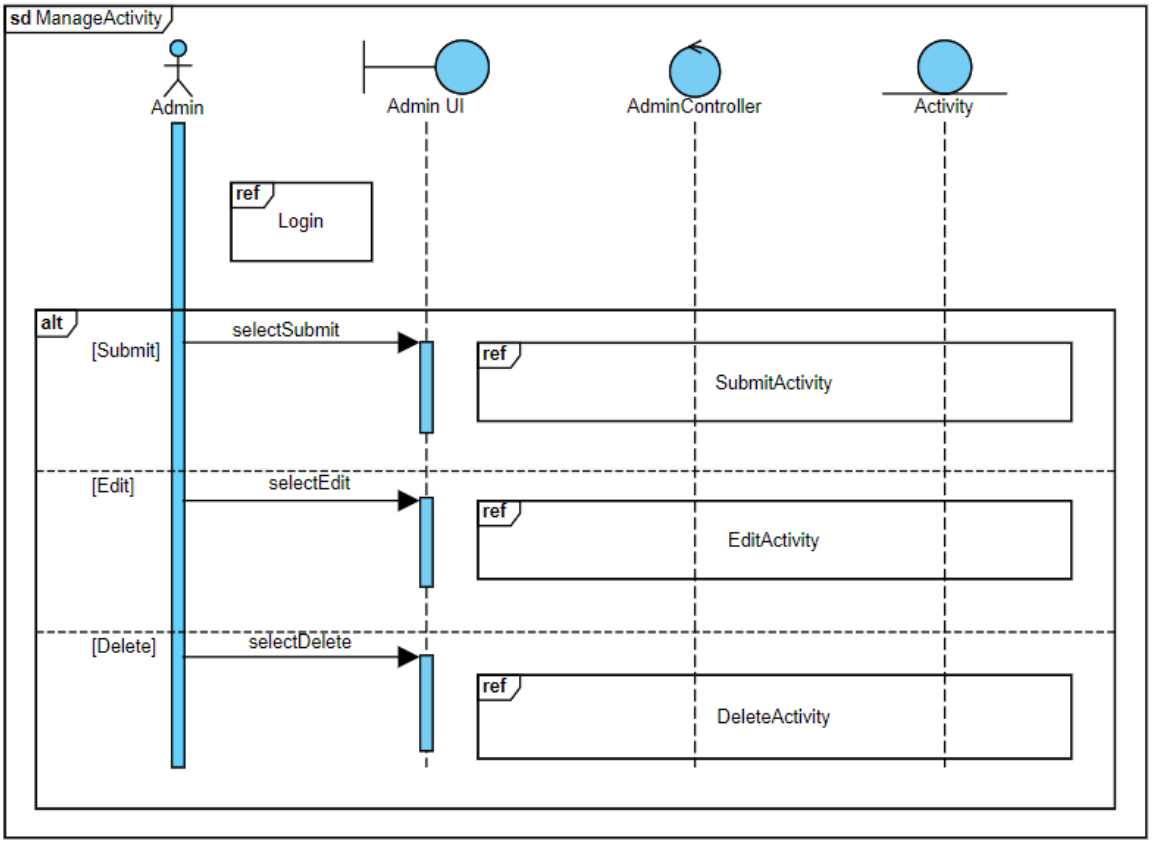

III.V ModerateActivityFeedback

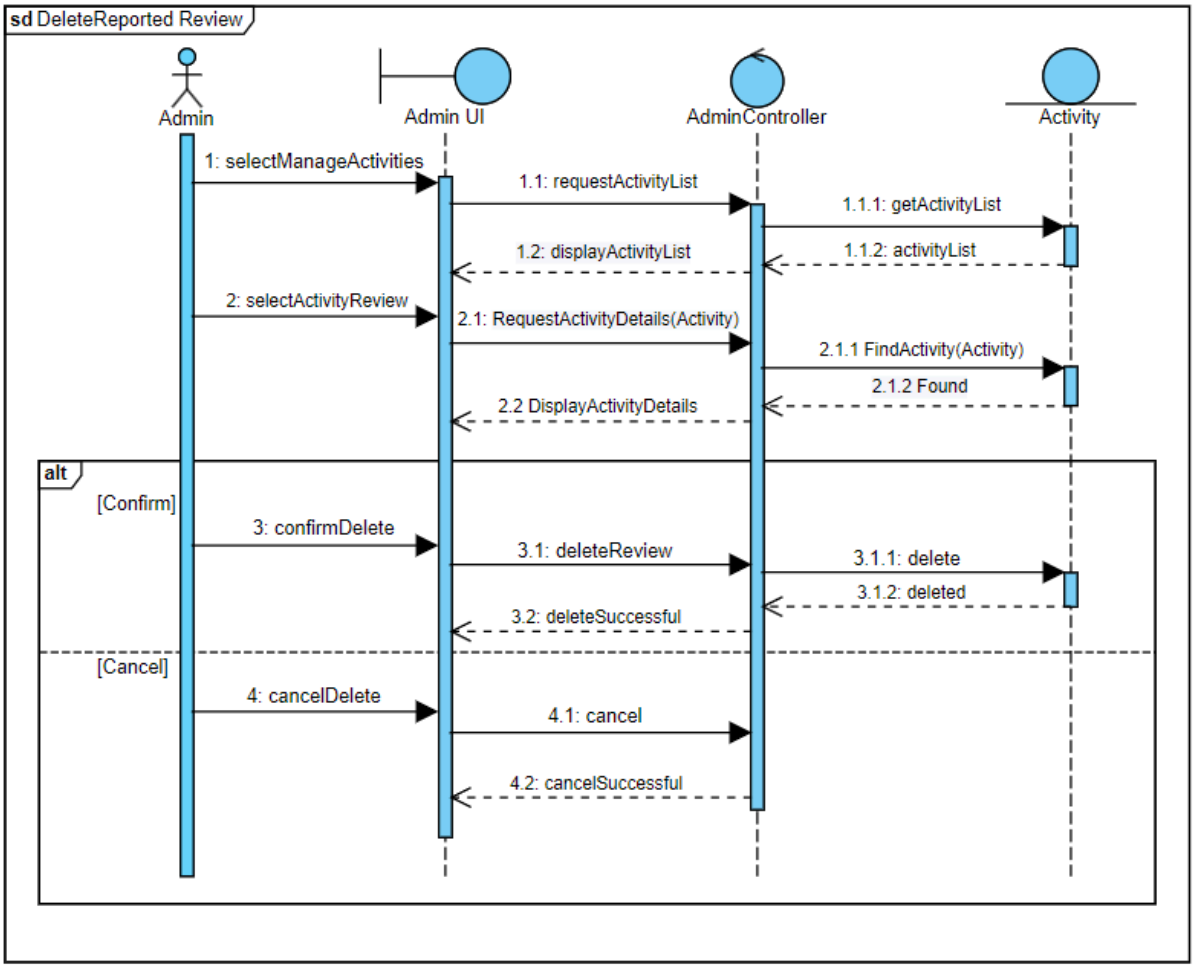

IV. For Functional Requirement #4

IV.I JoinActivity

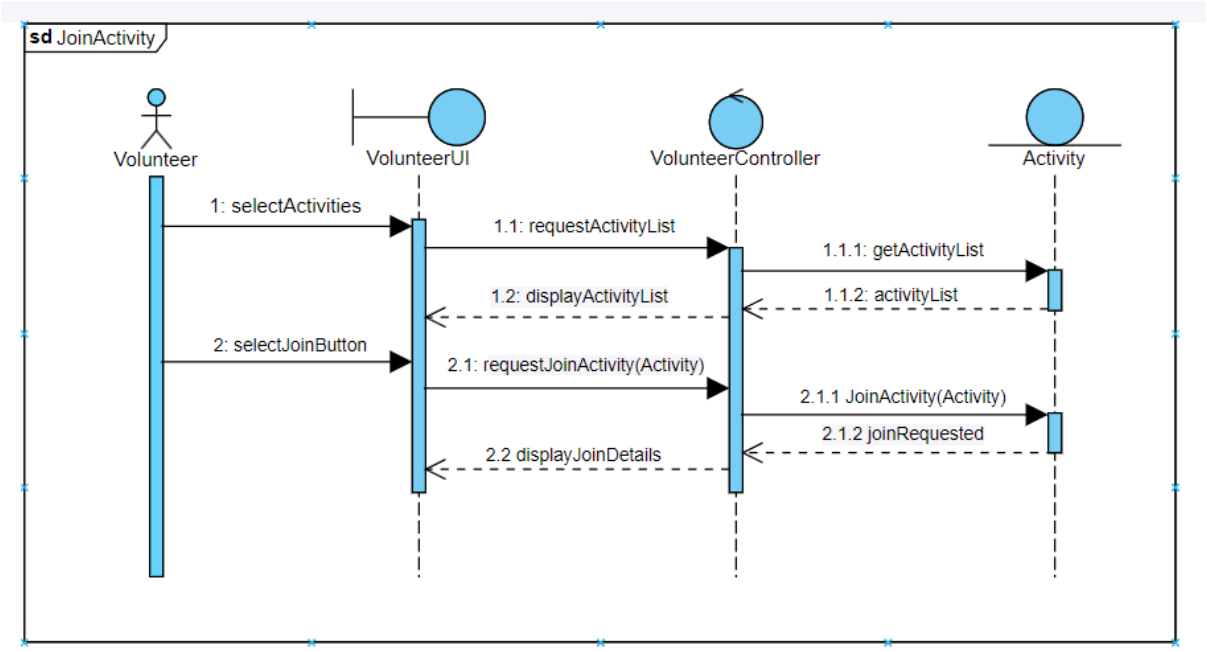

IV.II ProvideFeedback

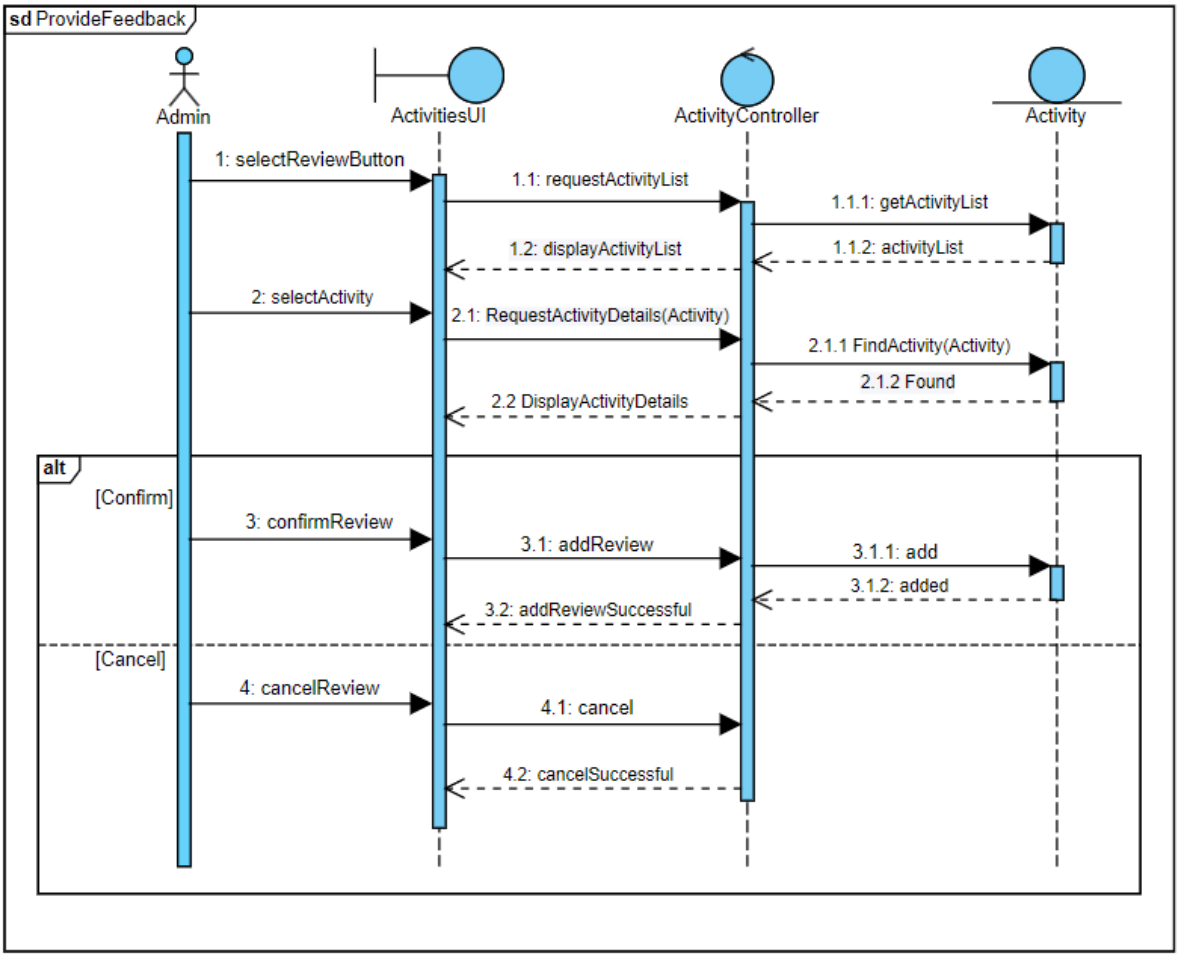

V. For Functional Requirement #5

V.I AuthenthicateUser

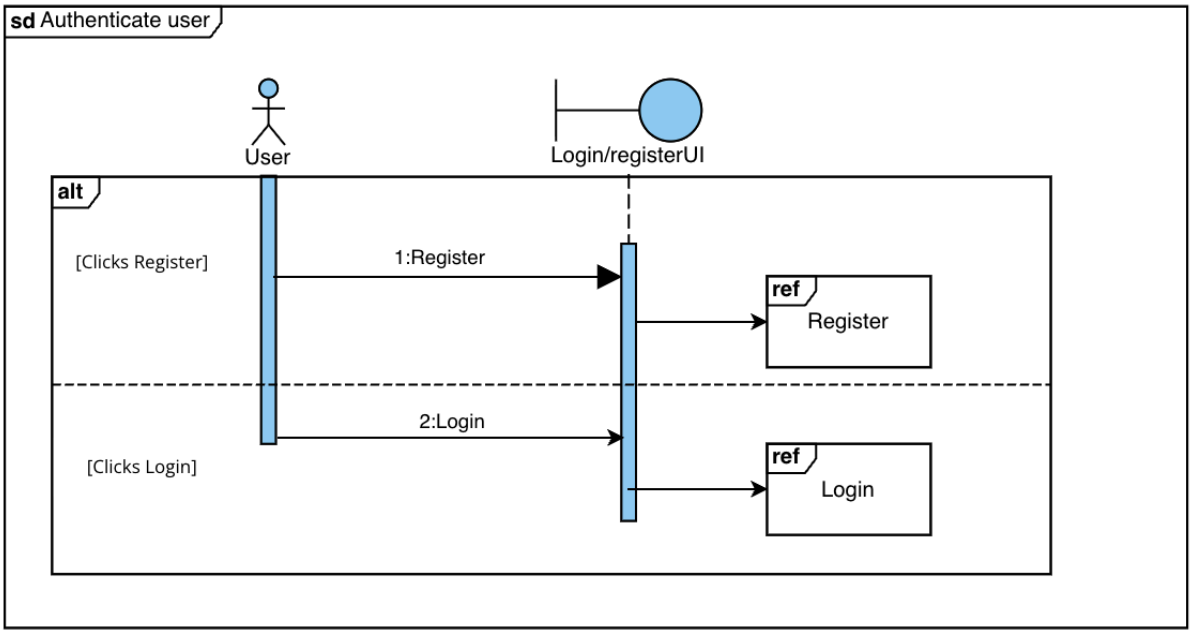

V.II Register

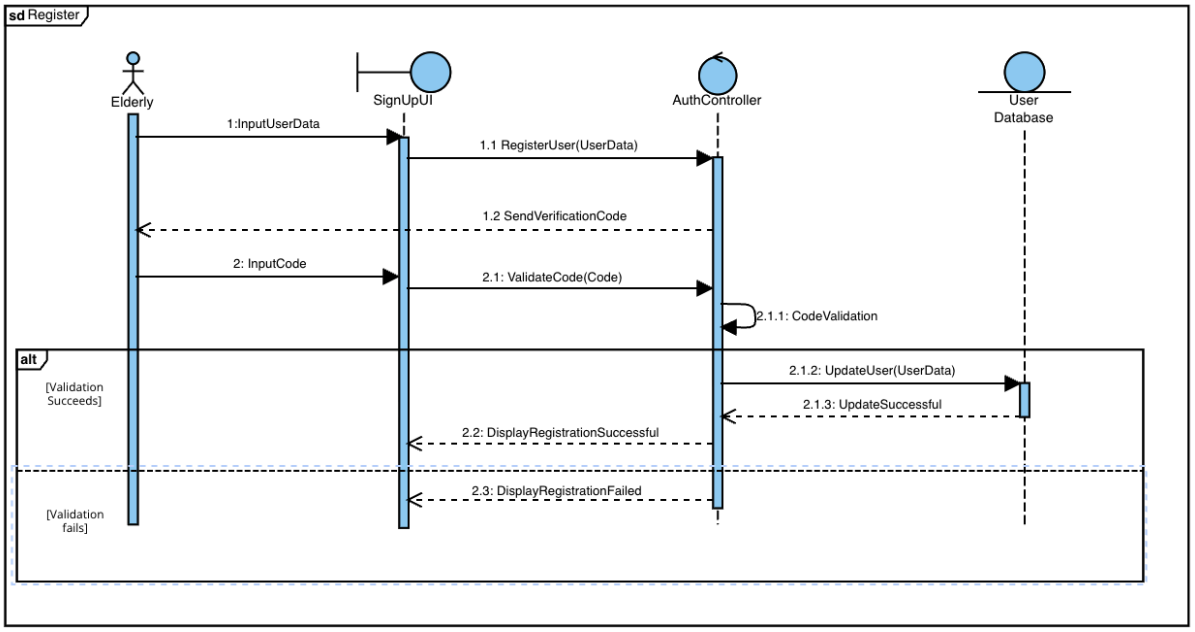

V.III Login

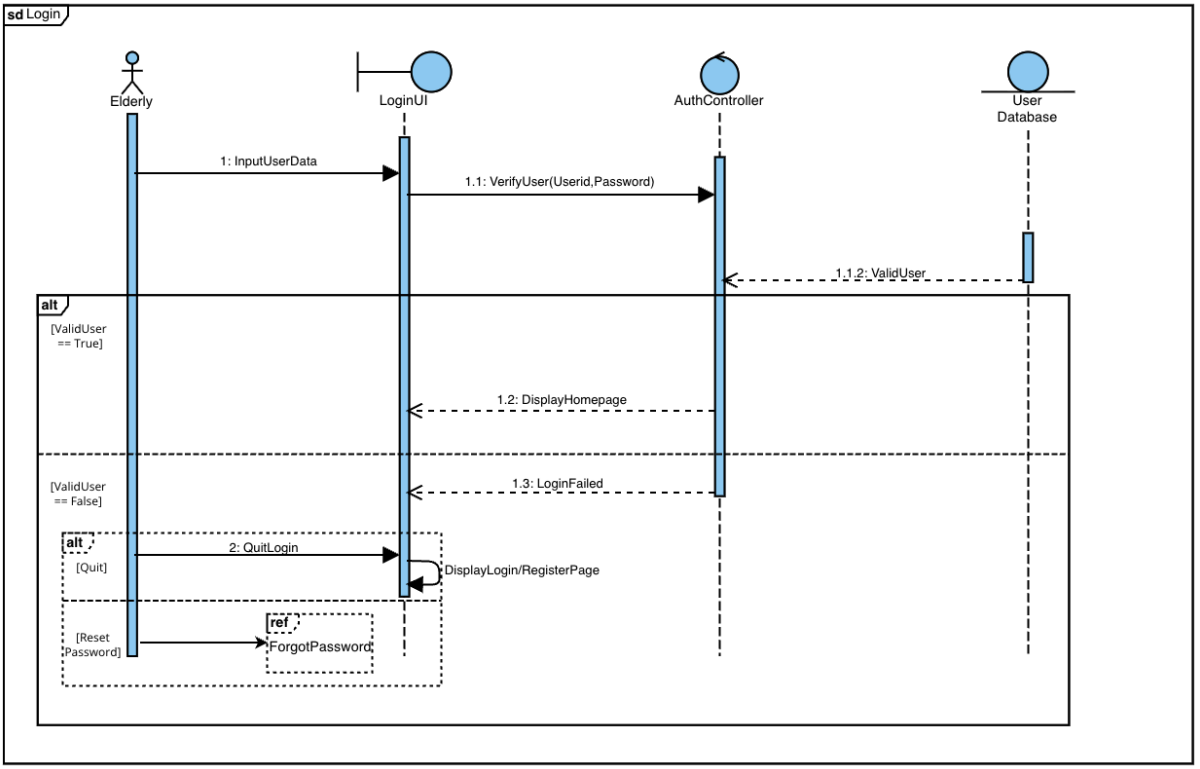
sd Login
Elderly
LoginUI
AuthController
User Database
1: InputUserData
1.1: VerifyUser(Userid,Password)
1.1.2: ValidUser
alt
[ValidUser == True]
1.2: DisplayHomepage
[ValidUser == False]
1.3: LoginFailed
alt
[Quit]
2: QuitLogin
DisplayLogin/RegisterPage
[Reset Password]
ref
ForgotPassword

V.IV ForgotPassword

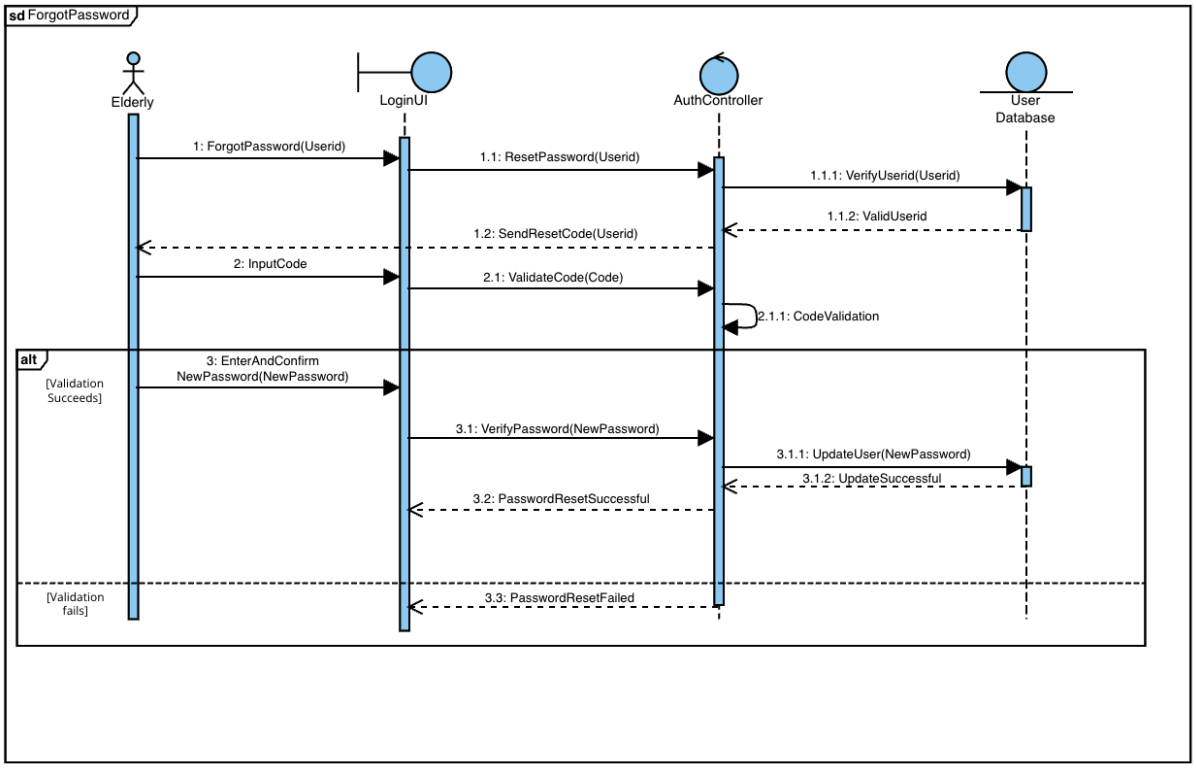
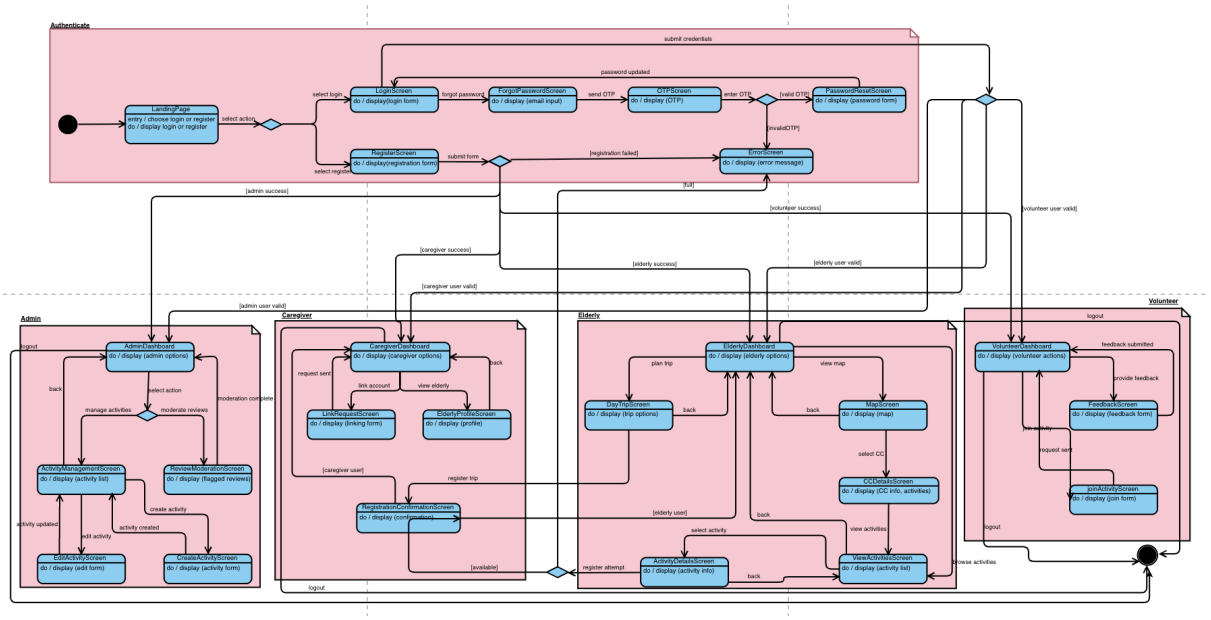
5. Initial Dialog Map